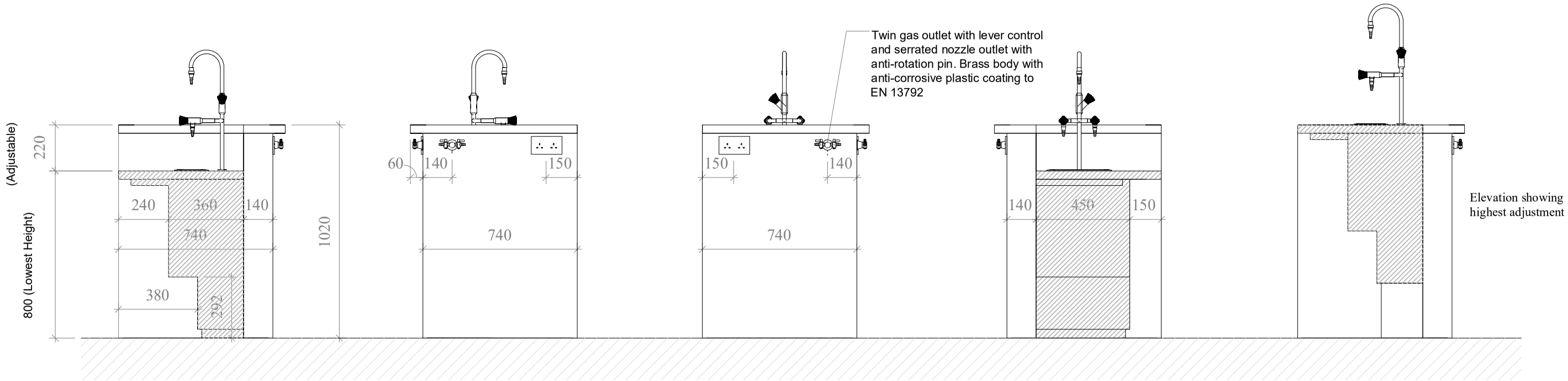

Adjustable sections are coloured

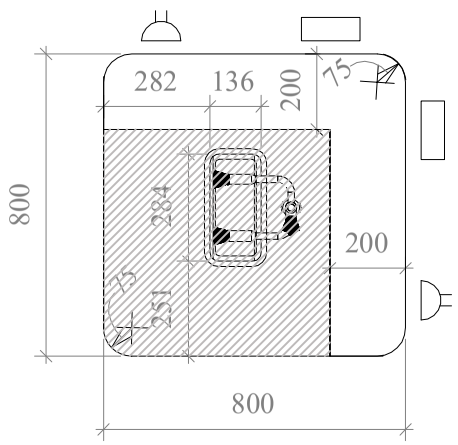

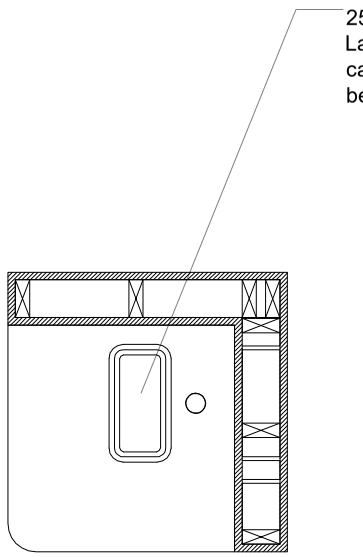

Plan @ 800 above floor level

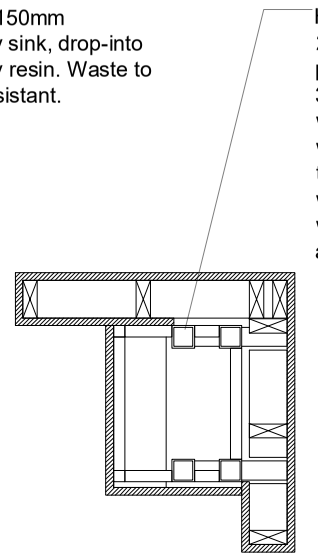

Plan @ 500 above floor level

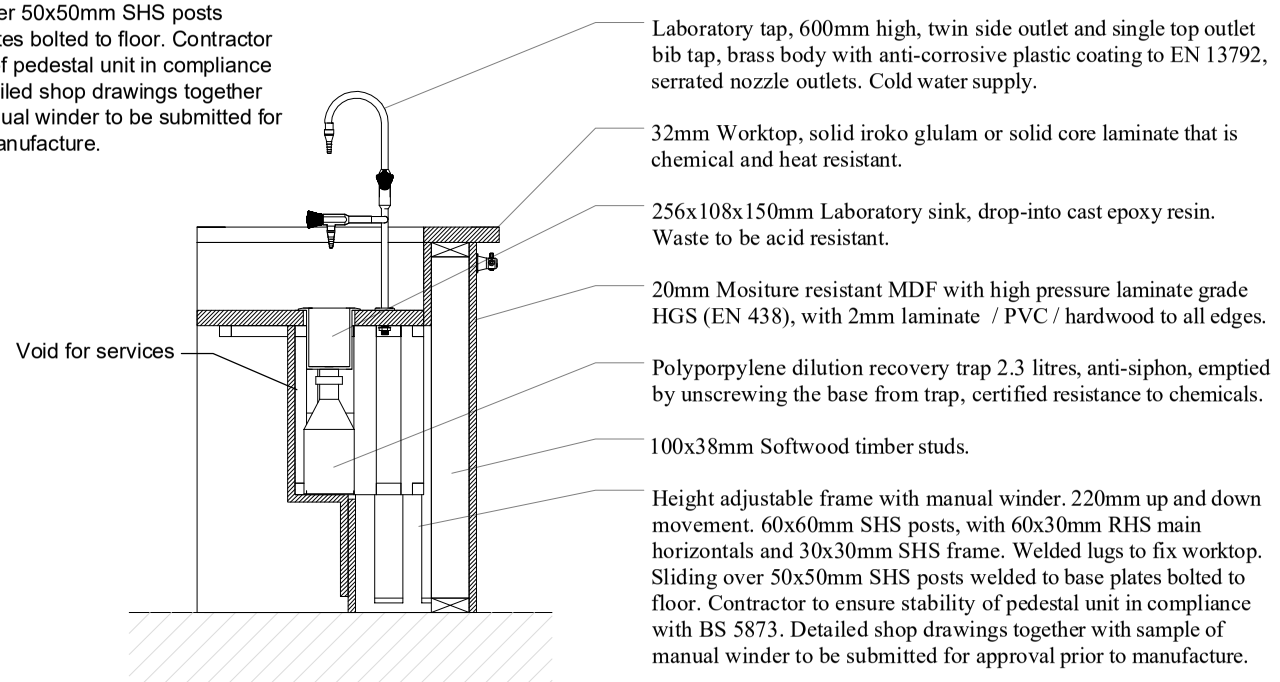

1 STUDENT PEDESTAL ACCESSIBLE (F.12)
1:20

DOCUMENTS FROM ***"DEPARTMENT OF EDUCATION & SKILLS"***

USE OF THIS DRAWING:
do not scale from this drawing, use written dimention only. all dimentions and details to be checked on site by the contractor. all architects drawings, details and specifications to be cross referenced with other consultants information. all discrepancies to be brought to the attention of the architect immediately. this drawing is not suitable for construction purposes unless clearly indicated. this drawing, and any digital version, remains the copyright of paul dillon architects. only when the appropriate fee is paid to paul dillon architects is a licence to use a hard copy of this drawing in order to produce one orignal work, granted. this drawing can not be reproduced without this licence. this licence can only be transfered on the expressed written consent of paul dillon architects. any digital information on this drawing can only be used were paul dillon architects are the design team leaders.

revision:	description:	by:	date:
A	TENDER	EV	09.06.26

paul dillon architects
[redacted]
Maam Valley Connemara County Galway Ireland
Tel. 00353 (0)87 6786244 info@pauldillonarchitects.com
Fax. 00353 (0)94 9548768 www.pauldillonarchitects.com

project:	ST TIERNANS CS, PARKVALE, BALALLY, DUBLIN
client:	BOARD OF MANAGEMENT ST TIERNANS CS
dwg title:	SCIENCE LAB FIXED FURNITURES DETAIL 7
scale on A3: 1:20	started: FEB 26 by: PD dwg no: 144.16 rev: A